POOL CONSTRUCTION

Suppose that a community is thinking of hiring your company to increase the size of their swimming pool. The dimensions of the existing pool are given below. The community has undergone considerable growth and they would like to increase pool memberships by 25%. In addition, they want to maintain the current hours of operation and make the pool available to all members during those times. Write a proposal for presentation to the mayor and council. Be sure that your proposal:

a. includes a labeled diagram,
b. explains why the new pool will accommodate 25% more members,
c. gives the surface area of the new pool as compared to that of the present pool,
d. gives the amount of water needed to fill the pool as compared to that needed to fill the existing pool, and
e. indicates all units of measure.

The surface area of the water in the pool is a 24' by 48' rectangle. The side view of the pool is uniform and shows its dimensions.

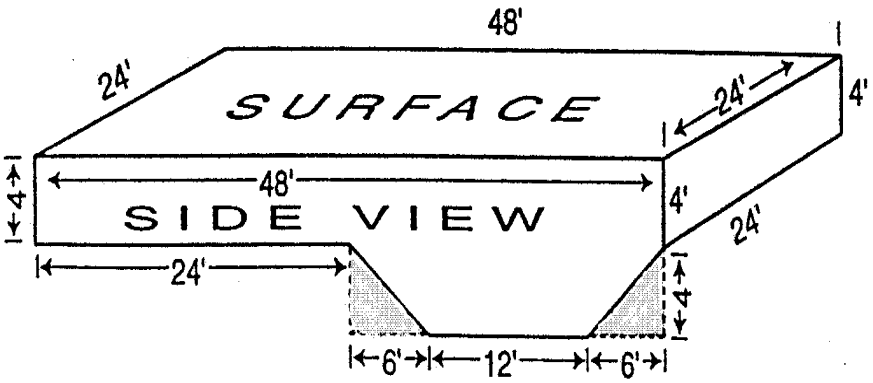

[Source: A Collection of Performance Tasks and Rubrics: High School Mathematics, Eye on Education, Larchmont, NY]

MATHEMATICAL CONCEPT

To complete this task, students must be able to find the volume of an irregular solid, and they must find a way to increase that volume by increasing the surface area of the water, so that pool membership may be increased by 25%. In addition, they must be able to communicate their plan in order to convince others of its merit.

SOLUTION

Many solutions are possible but those which are viable must increase the surface area of the water in the pool by 25%. One way to accomplish this is to increase the length or width of that surface by 25%. For instance, students may increase the width to 30 ft and leave the length unchanged, or they may increase the length to 60 ft and leave the width unchanged. Another way to accomplish the change is to both dimensions. For instance, they could increase the width by a factor of 3 and then reduce the length by a factor of 5/12, yielding a 72' x 20' surface area. In any case, the surface area should increase from 1,152 sq ft to 1440 sq ft.

[Source: A Collection of Performance Tasks and Rubrics: High School Mathematics, Eye on Education, Larchmont, NY]

In order to calculate the volume of the existing pool, students should find the cross-sectional side area by breaking it up into a 4 x 48 rectangle, and a trapezoid with bases of 24 and 12 and height of 4. These areas, respectively 192 and 72, sum to 264 sq ft. This cross-sectional area of 264 sq ft should be multiplied by 24 ft, the width of the pool, yielding a volume of 6,336 cubic feet. That is,
$V = [48 \times 4 + 4(12 + 24)/2] \times 24 = 6{,}336$. If length does not change, then the new volume will be 1.25 of the old volume or 7,920 cu ft. However if the length changes, other volumes are possible and must be considered on their merit.

Note: Increasing the volume of the pool by increasing a dimension other than length or width of the surface area of the water, simply increases the depth of the pool. It will not allow for increased membership.

RUBRIC

Level 4: This response offers clear and convincing evidence of a deep knowledge of the mathematics related to this task.

Characteristics:
The diagram is 3 dimensional and correctly labeled.
The surface area is correctly calculated, and compared to the original area.
The volume of water is correct and compared to the original volume.
The solution to the problem is viable and the explanation is correct.

Level 3: This response offers evidence of substantial knowledge of the mathematics related to this task.

Characteristics:
The diagram shows only the surface of the pool but is correctly labeled.
The surface area and volume of the water are correctly calculated but may not be compared to the original amounts.

[Source: A Collection of Performance Tasks and Rubrics: High School Mathematics, Eye on Education, Larchmont, NY]

The solution to the problem is viable and the explanation can be followed but is complete probably due to the lack of comparisons to the original conditions.

Level 2: This response offers limited or inconsistent evidence of knowledge of the mathematics related to this task.

Characteristics:
The diagram is incomplete or not labeled.
The surface area is given without comparison to original area.
The volume of water is given without comparison to the original volume.
The solution to the problem is viable but the explanation is missing or incomprehensible.

Level 1: This response offers little or no evidence of knowledge of the mathematics related to this task.

Characteristics:
The diagram has the wrong shape or is missing.
The surface area is incorrectly calculated or missing.
The volume of water is incorrectly calculated or missing.
The solution to the problem is missing or not feasible.

[Source: A Collection of Performance Tasks and Rubrics: High School Mathematics, Eye on Education, Larchmont, NY]